EX. No. 01 **WELCOME MESSAGE**

AIM

To develop an android program for displaying the welcome message.

PROCEDURE

1. Start an android studio application.
2. Select File in the menu bar.
3. Choose your project as **Empty View Activity** and click the Next button.
4. Name your project (The application name begins with an uppercase letter), select language as java, select your minimum API level as (Android 8.0 Oreo) then click Finish button.
5. For designing, type xml coding in **activity_main.xml**.

   Components used for designing

   - Button
6. Type java coding in **MainActivity.java**.
7. To run the 'app' press play button in android studio or shift + F10.
8. Select Deployment project as your Emulator
9. In the connected device, select your Emulator and click the ok button.
10. Open your installed app in Emulator.

EX. No. 02 DISPLAYING USER INFORMATION

AIM

To develop an android app for displaying a form to get user information.

PROCEDURE

1. Start an android studio application.
2. Select File in the menu bar.
3. Choose your project as **Empty View Activity** and click the Next button.
4. Name your project (The application name begins with an uppercase letter), select language as java, select your minimum API level as (Android 8.0 Oreo) then click Finish button.
5. For designing, type xml coding in **activity_main.xml**.

   Components used for designing

   - Button
   - EditText
6. Type java coding in **MainActivity.java**.
7. To run the 'app' press play button in android studio or shift + F10.
8. Select Deployment project as your Emulator
9. In the connected device, select your Emulator and click the ok button.
10. Open your installed app in Emulator.

EX. No. 03 **LOGIN CREDENTIALS**

AIM

To develop an android app for validating the login credentials and display the Welcome message using new activity for a valid user

PROCEDURE

1. Start an android studio application.
2. Select File in the menu bar.
3. Choose your project as **Empty View Activity** and click the Next button.
4. Name your project (The application name begins with an uppercase letter), select language as java, select your minimum API level as (Android 8.0 Oreo) then click Finish button.
5. For designing, type xml coding in **activity_main.xml**.

   Components used for designing

   - Button
   - EditText
6. Type java coding in **MainActivity.java**.
7. For displaying welcome message in new activity,

   a. Select File in menu bar
   b. Click New and select Activity
   c. Choose Empty View Activity
8. Change the activity name as Loginwelcome
9. Design the xml page (activity_loginwelcome) and type the java coding in Loginwelcome.java
10. To run the ‘app’ press play button in android studio or shift + F10.
11. Select Deployment project as your Emulator
12. In the connected device, select your Emulator and click the ok button.
13. Open your installed app in Emulator.

EX. No. 04 **SIMPLE CALCULATOR**

AIM

To develop an android app to design a calculator.

PROCEDURE

1. Start an android studio application.
2. Select File in the menu bar.
3. Choose your project as **Empty View Activity** and click the Next button.
4. Name your project (The application name begins with an uppercase letter), select language as java, select your minimum API level as (Android 8.0 Oreo) then click Finish button.
5. For designing, type xml coding in **activity_main.xml**.

   Components used for designing

   - GridLayout
   - Button
   - EditText
6. Type java coding in **MainActivity.java**.
7. To run the 'app' press play button in android studio or shift + F10.
8. Select Deployment project as your Emulator
9. In the connected device, select your Emulator and click the ok button.
10. Open your installed app in Emulator.

EX. No. 05 **INFRARED COMMUNICATION**

AIM

To study the working principles of infrared communication in an Android application.

PROCEDURE

1. **Check IR Hardware Availability** – Confirm that the Android device has a built-in IR blaster.
2. **Create Android Project** – Develop a new Android application using Android Studio.
3. **Request IR Permission** – Add IR-related permission in AndroidManifest.xml.
4. **Initialize IR Manager** – Access the IR service using Android API.
5. **Design User Interface** – Create buttons or controls to send IR commands.
6. **Encode Command Pattern** – Convert command into frequency and pulse sequence.
7. **Call Transmit Function** – Invoke API method to send IR pattern.
8. **Signal Modulation** – IR blaster converts electrical signal into IR pulses.
9. **Reception by Target Device** – External device receives the IR pulses.
10. **Command Execution** – Target device performs the requested operation.

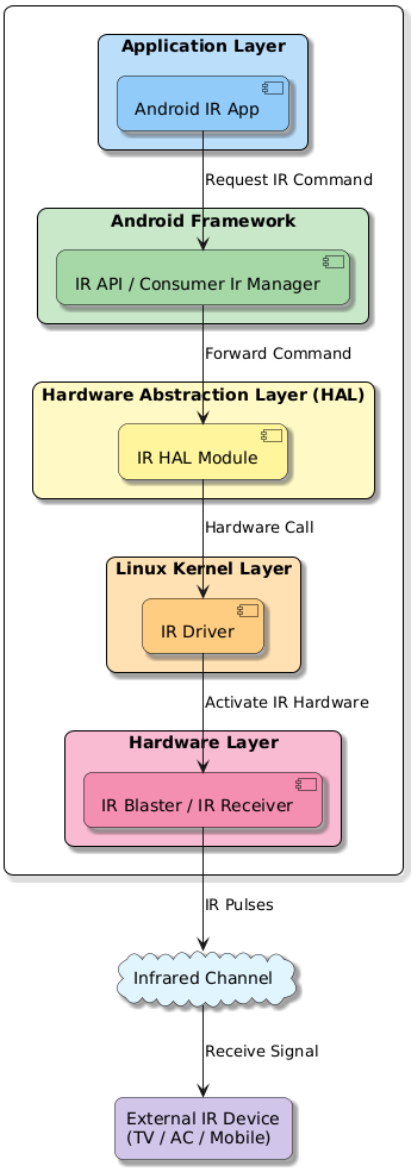

EX. No. 06 BLUETOOTH FILE TRANSFER

AIM

To study the working of Bluetooth-based file transfer in Android devices.

PROCEDURE

1. **Create New Project** – Open Android Studio and create a new Android project with an empty activity.
2. **Configure Project Settings** – Select appropriate SDK version and enable required device compatibility.
3. **Add Bluetooth Permissions** – Declare Bluetooth and location permissions in the Android manifest file.
4. **Check Device Compatibility** – Ensure the testing device supports Bluetooth functionality.
5. **Enable Bluetooth on Device** – Turn ON Bluetooth manually on both Android devices.
6. **Make Device Discoverable** – Set the device visibility so nearby devices can detect it.
7. **Pair the Devices** – Connect both devices securely using pairing confirmation or PIN.
8. **Design File Transfer Interface** – Create user interface elements (buttons, file selection option) for sending and receiving files.
9. **Test File Transfer Process** – Run the application on both devices and verify successful sending and receiving of files

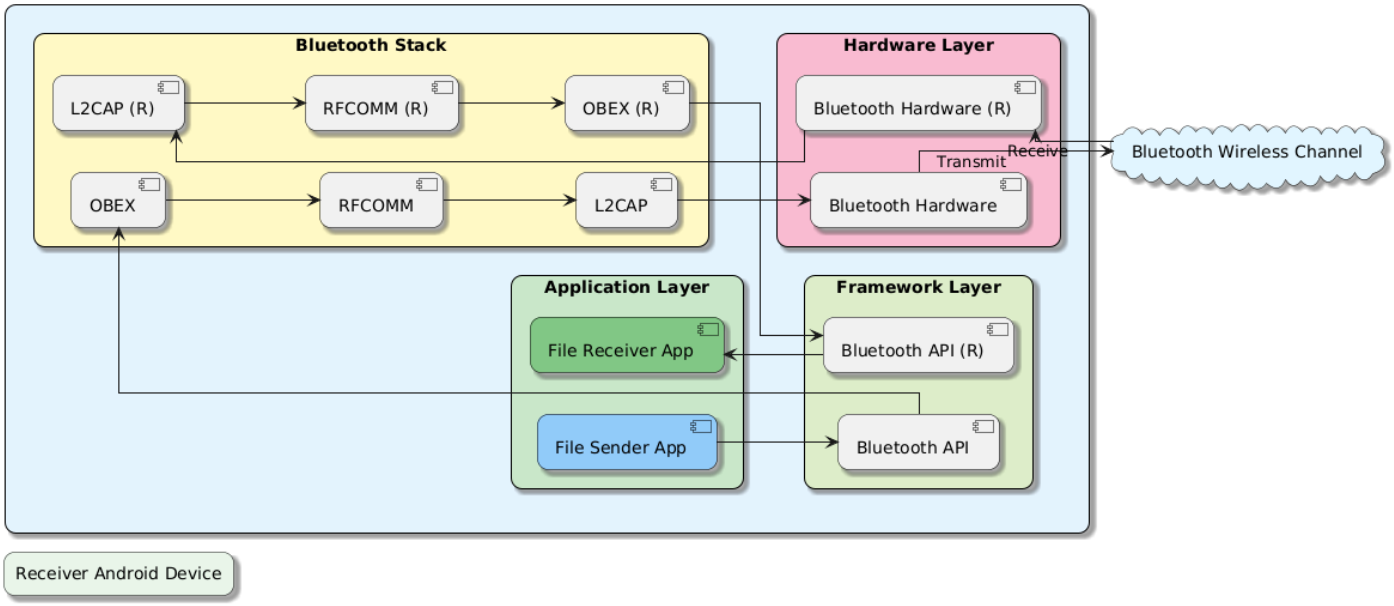

EX. No. 07 IDENTIFYING THE BLUETOOTH DEVICES

AIM

To study the method of identifying and listing nearby Bluetooth devices within wireless range using an Android device.

PROCEDURE

1. **Install Android Studio** – Set up development environment.
2. **Create Bluetooth Project** – Develop a Bluetooth scanner application.
3. **Add Required Permissions** – Include Bluetooth and location permissions.
4. **Check Bluetooth Support** – Verify device has Bluetooth hardware.
5. **Enable Bluetooth** – Turn ON Bluetooth manually or programmatically.
6. **Make Device Discoverable** – Allow visibility to nearby devices.
7. **Start Device Discovery** – Initiate Bluetooth scanning process.
8. **Send Inquiry Signal** – Device broadcasts search signal in range.
9. **Receive Device Responses** – Nearby devices reply with identification details.
10. **Display Discovered Devices** – Show device name and address in the app.

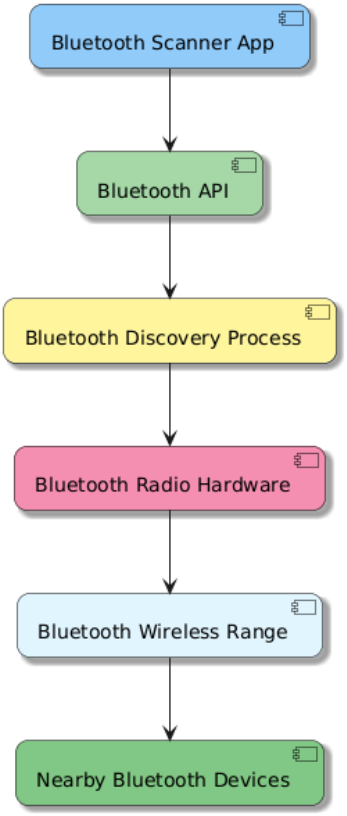

EX. No. 08 **LIST VIEW**

AIM

To develop an application that shows different country name on a list view and on selecting an item it displays its corresponding flag.

PROCEDURE

1. Start an android studio application.
2. Select File in the menu bar.
3. Choose your project as **Empty View Activity** and click the Next button.
4. Name your project (The application name begins with an uppercase letter), select language as java, select your minimum API level as (Android 8.0 Oreo) then click Finish button.
5. For designing, type xml coding in **activity_main.xml**.

   Components used for designing

   - ListView
   - TextView
6. Type java coding in **MainActivity.java**.
7. To run the 'app' press play button in android studio or shift + F10.
8. Select Deployment project as your Emulator
9. In the connected device, select your Emulator and click the ok button.
10. Open your installed app in Emulator.